Lab 9: IMAQ and VISION tool box

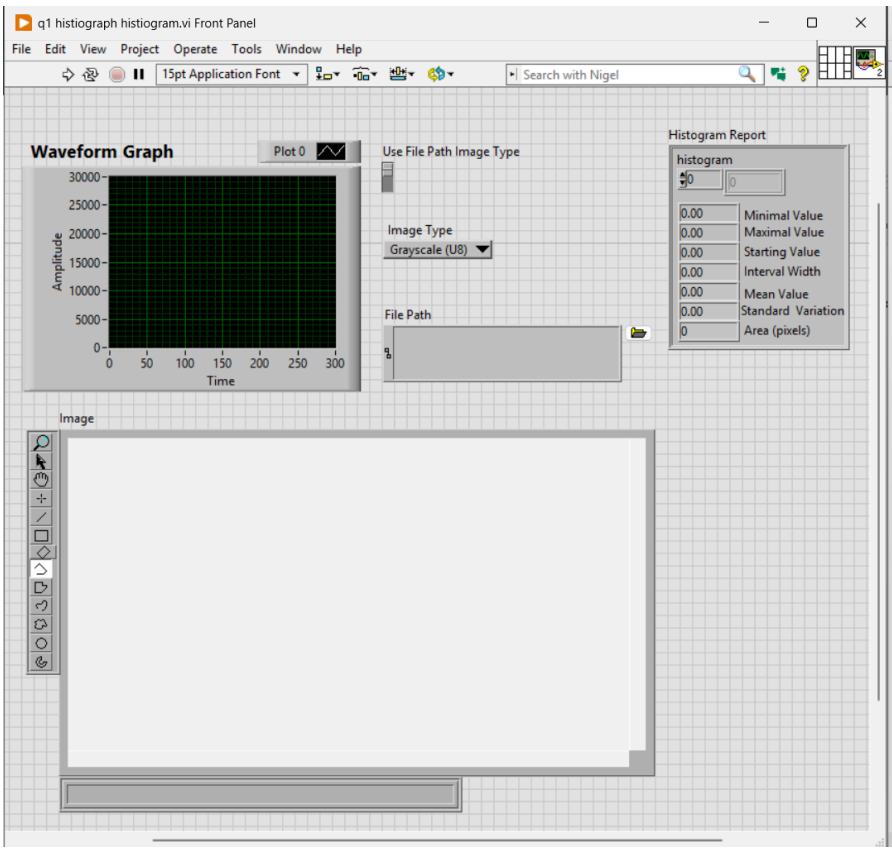

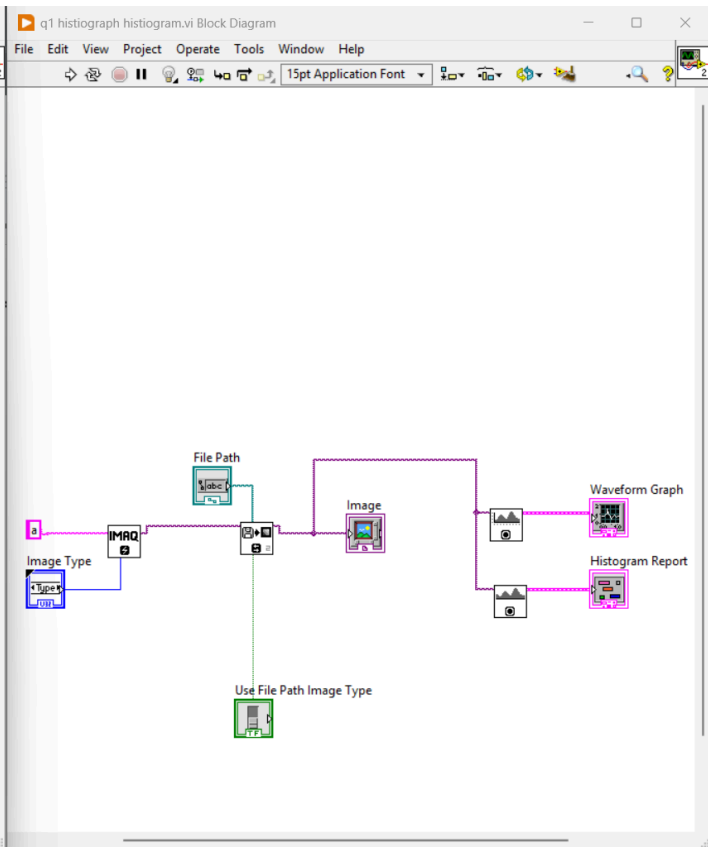

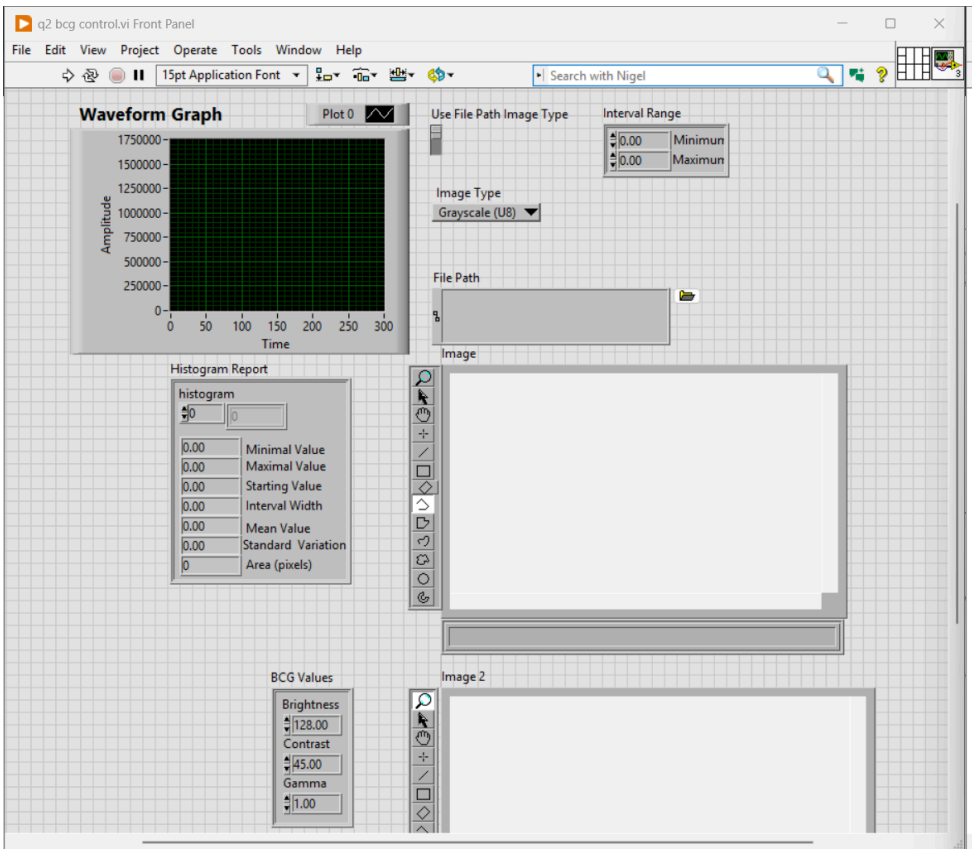

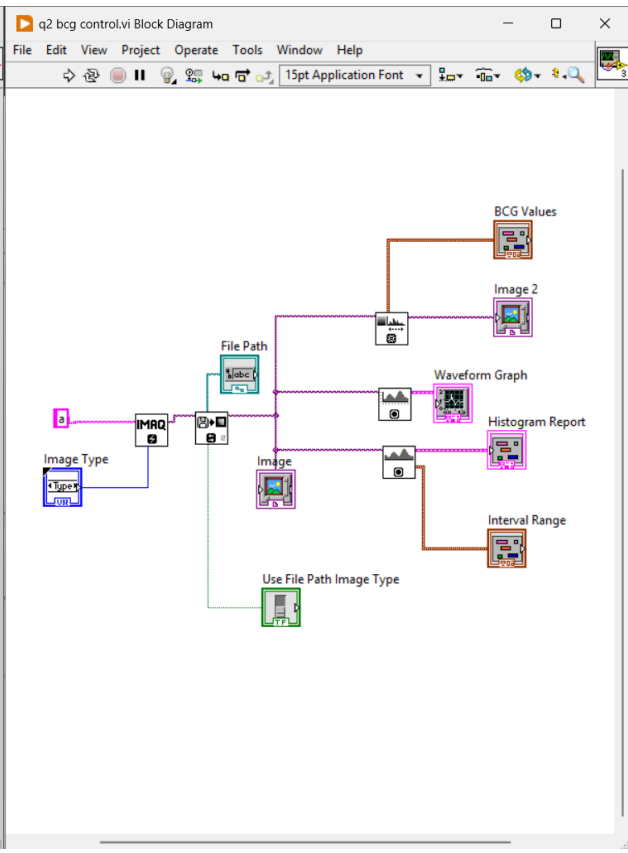
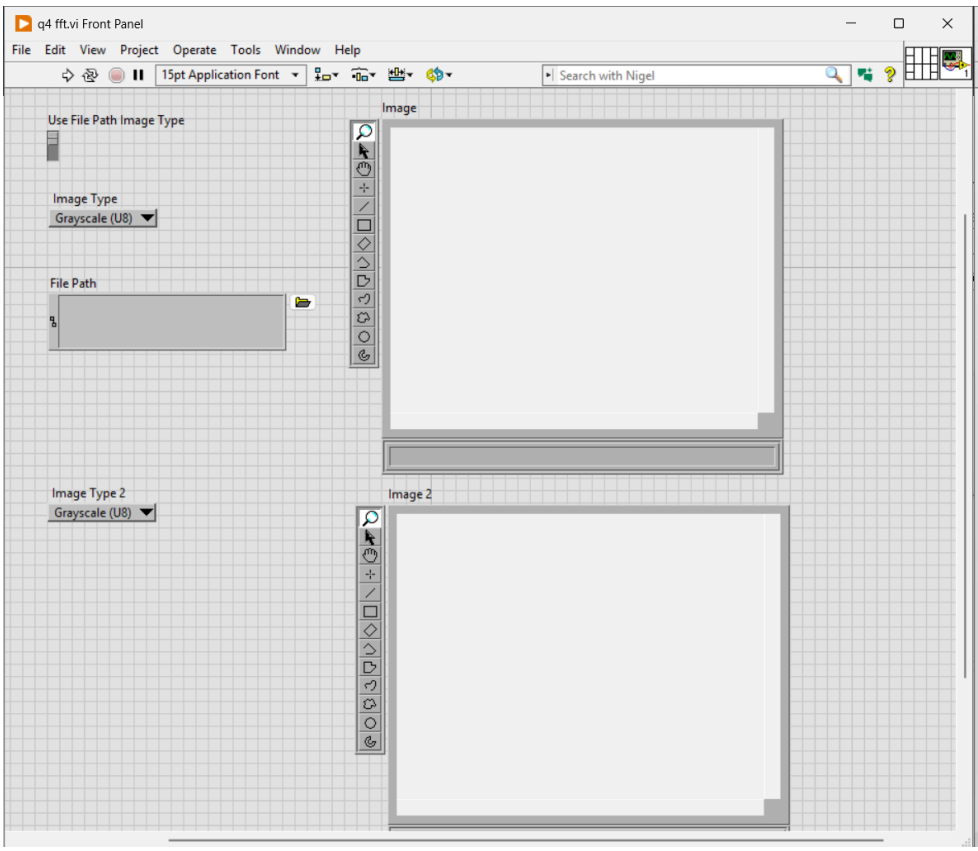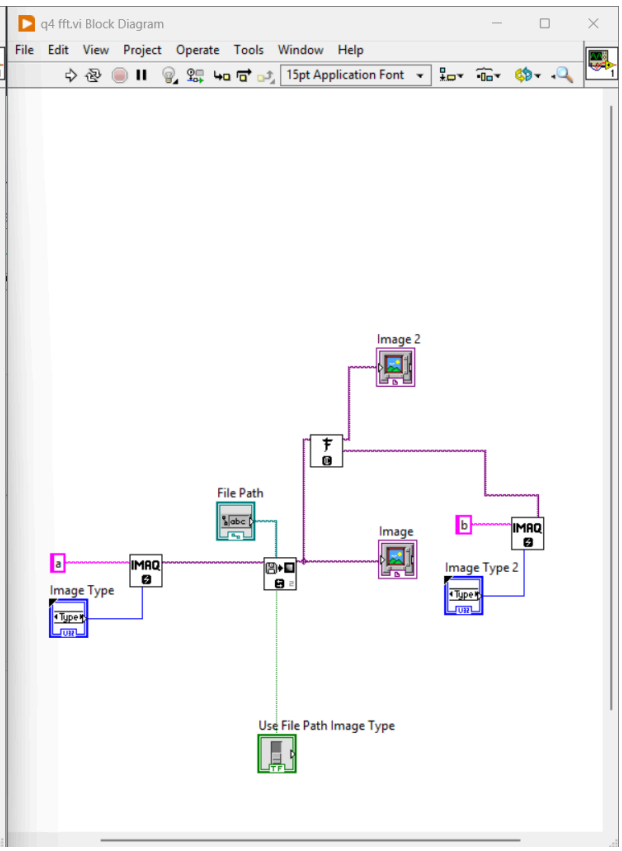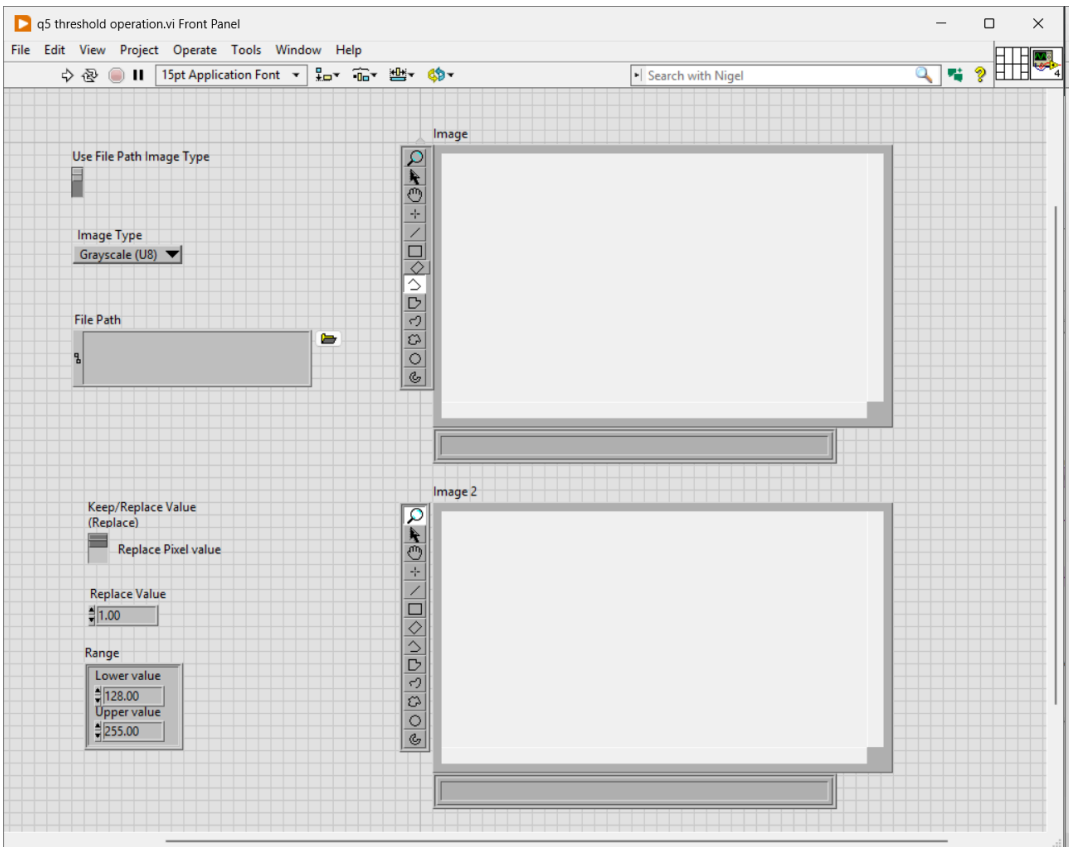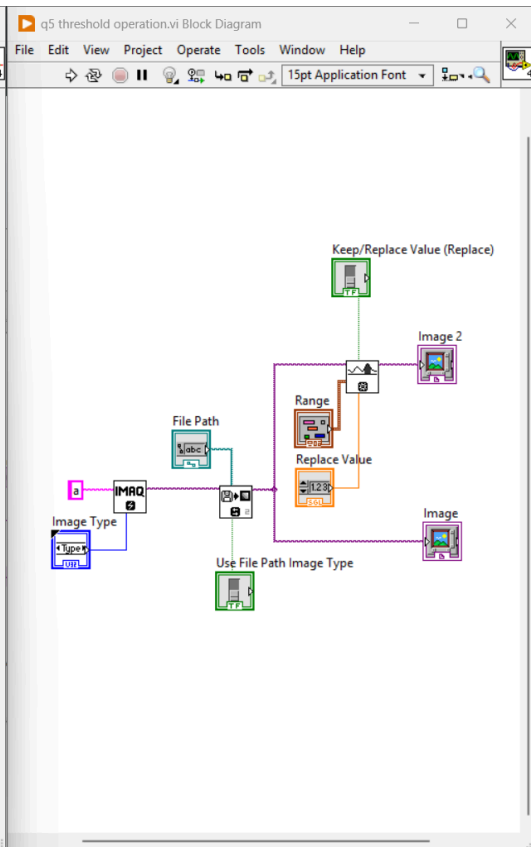
Lab 9: IMAQ and VISION tool box